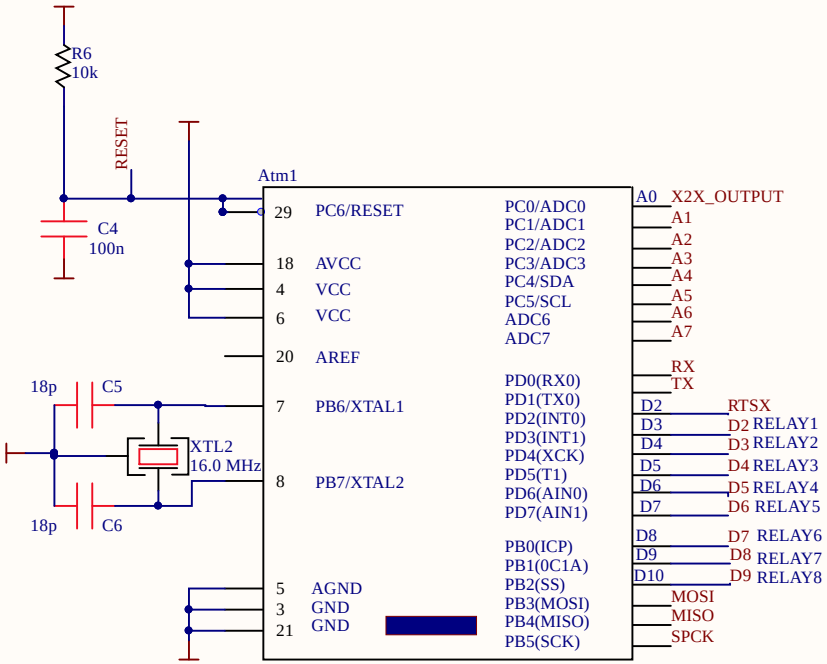

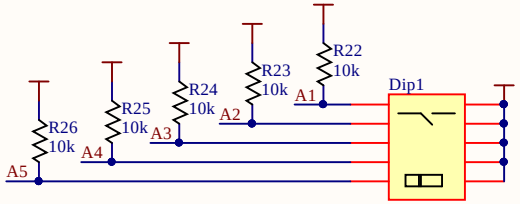

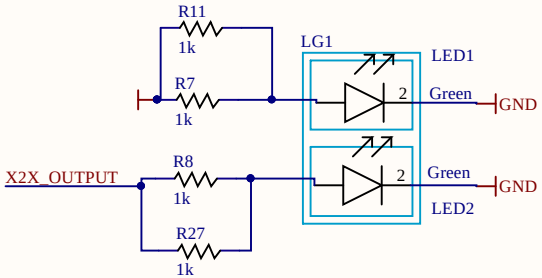

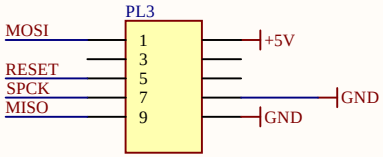

Title		
Size A4	Number	Revision
Date: 16.03.2026	Sheet of	
File: D:\IGAS_Transfer\..\CPU.SchDoc	Drawn By:	

Bus X2X

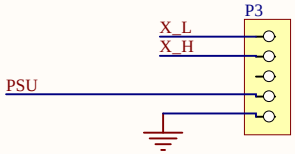

Title			
Size A4	Number		Revision
Date:	16.03.2026	Sheet of	
File:	D:\IGAS_Transfer\..\Plugs.SchDoc	Drawn By:	

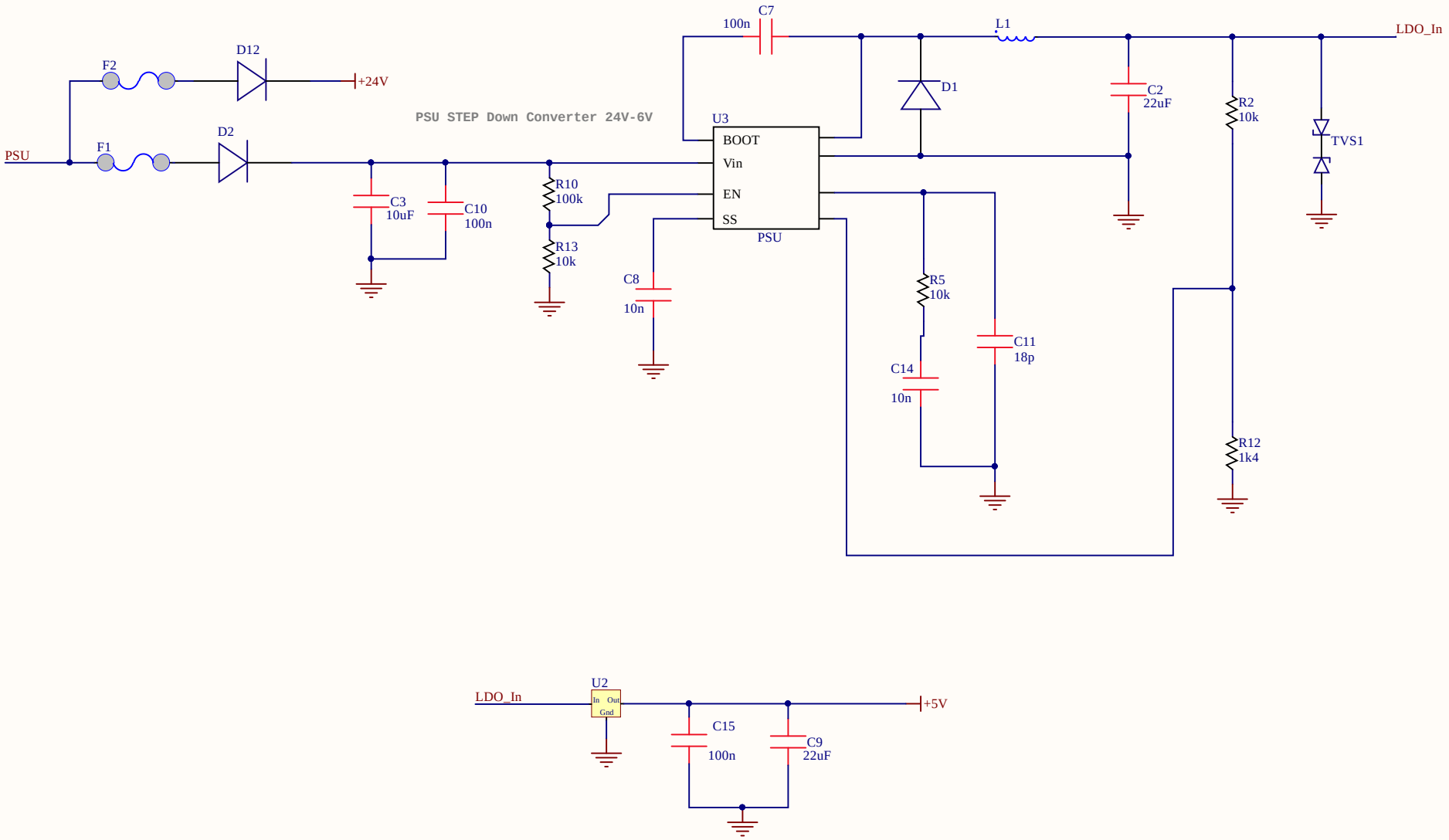

Title	PSU 24V-5V	
Size A4	Number	Revision
Date: 16.03.2026		Sheet of
File: D:\IGAS_Transfer\..\PSU.SchDoc		Drawn By:

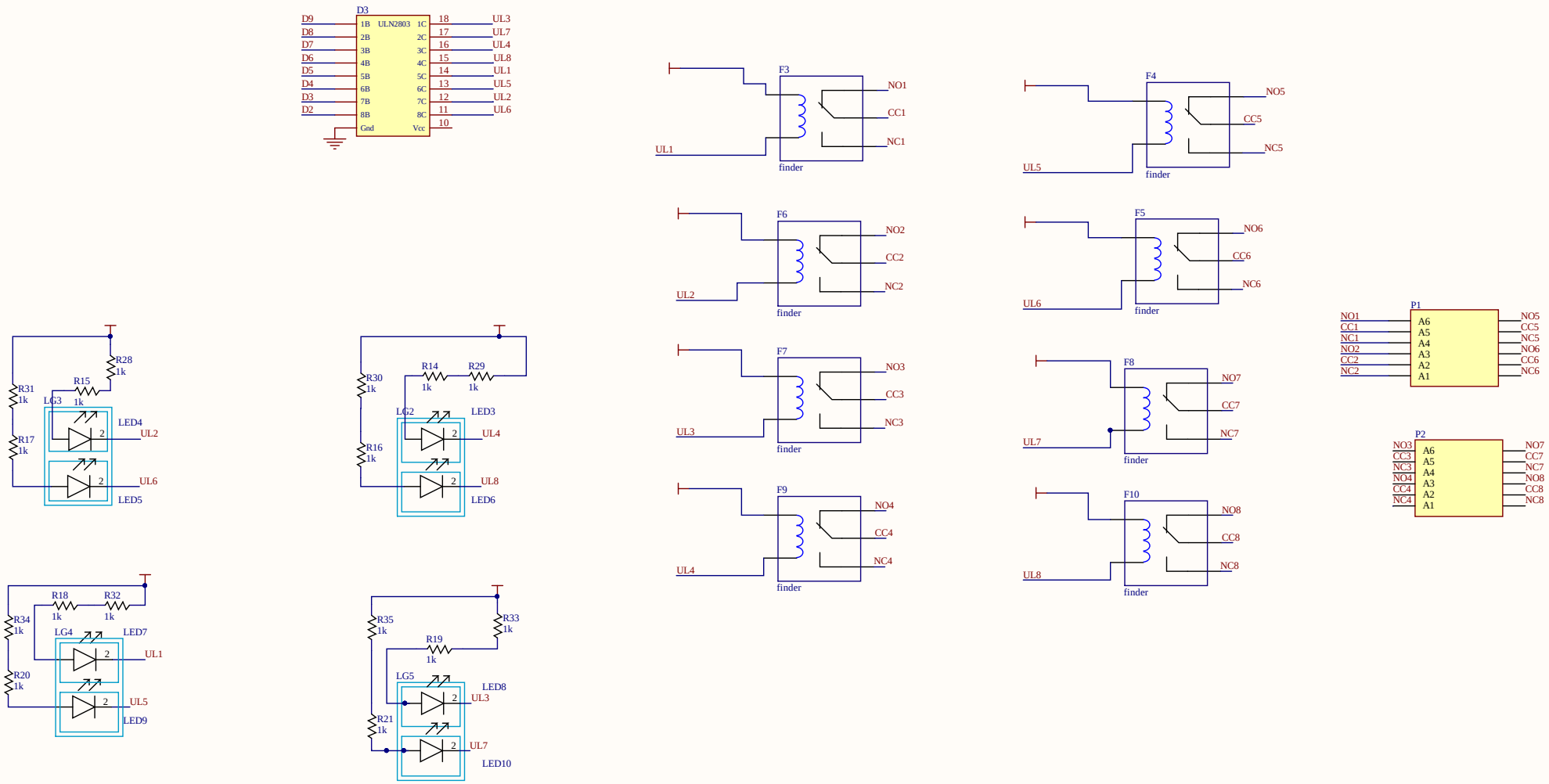

Title		
Size A3	Number	Revision
Date: 16.03.2026		Sheet of
File: D:\IGAS_Transfer\..\Relays.SchDoc		Drawn By:

X2X connection Line

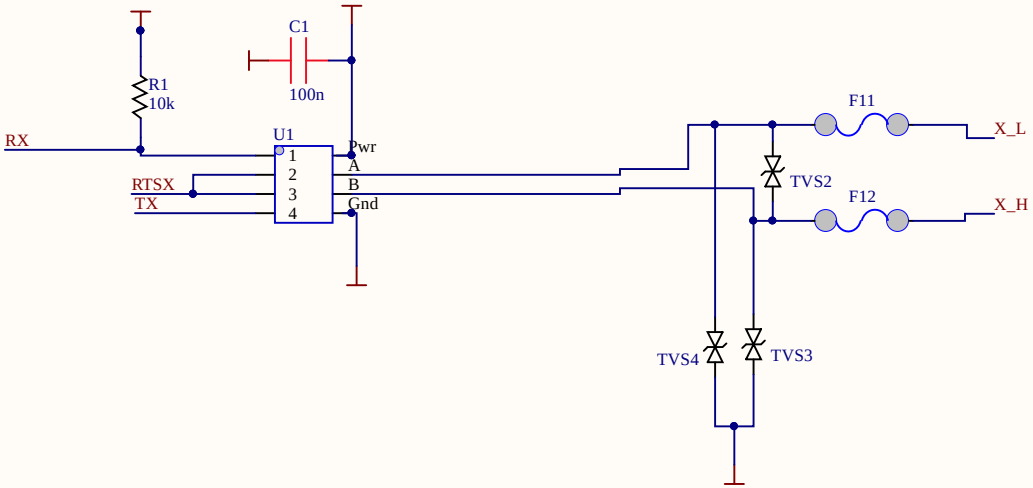

SPI - CAN

Title		
Size A4	Number	Revision
Date: 16.03.2026		Sheet of
File: D:\IGAS_Transfer\..\RS485.SchDoc		Drawn By:

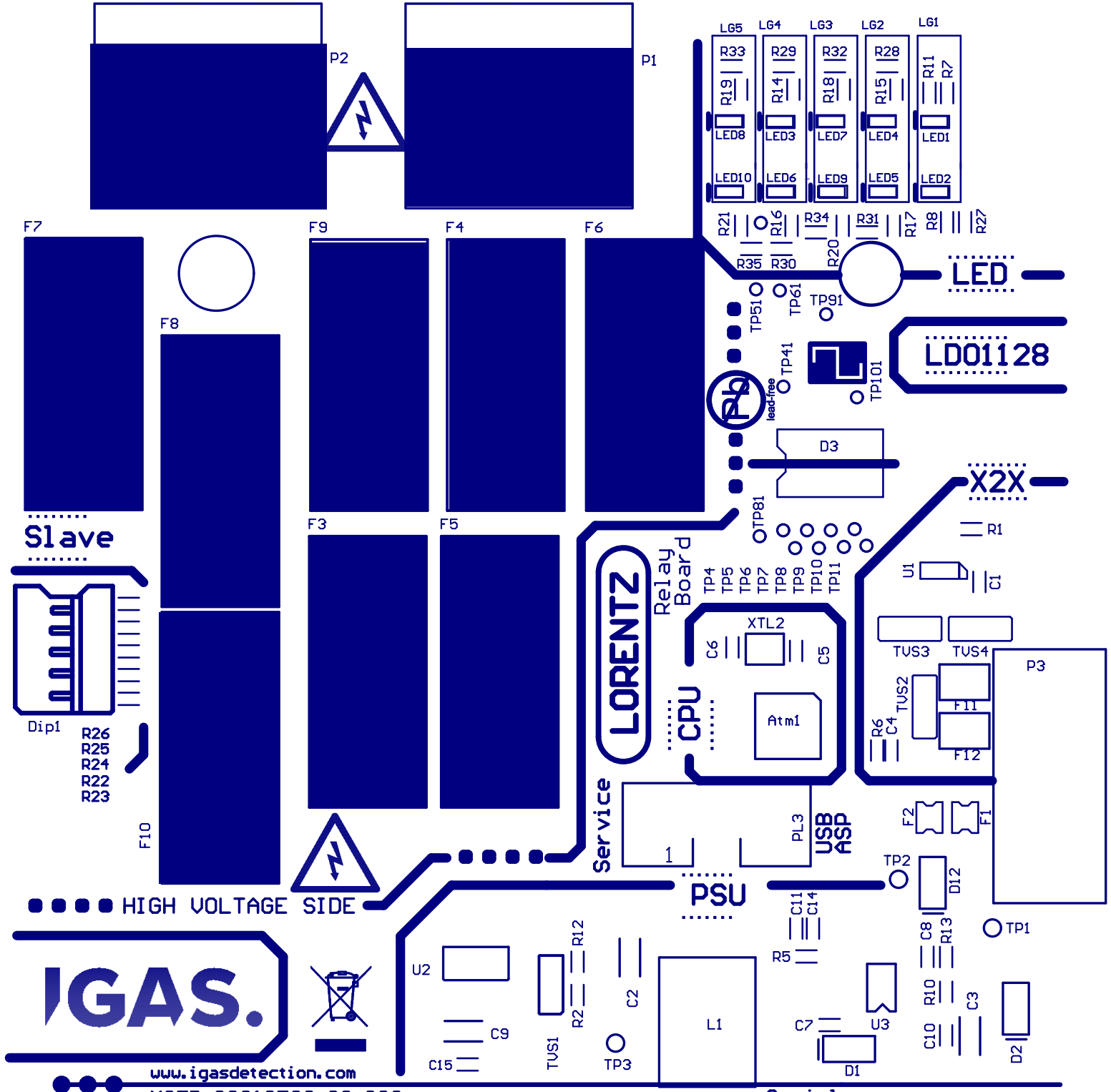
P2
P1
LG5
LG4
LG3
LG2
LG1
R33
R29
R32
R28
R11
R7
R19
R14
R18
R15
LED8
LED3
LED7
LED4
LED1
LED10
LED6
LED9
LED5
LED2
R21
R16
R34
R31
R17
R8
R27
R35
R30
R20
LED
TP51
TP61
TP91
TP41
TP101
LD01128
lead-free
D3
X2X
TP81
R1
U1
C1
F7
F8
F9
F4
F6
F3
F5
F10
Slave
Dip1
R26
R25
R24
R22
R23
Relay Board
TP4
TP5
TP6
TP7
TP8
TP9
TP10
TP11
LORENTZ
XTL2
C6
C5
CPU
Atm1
TVS3
TVS4
TVS2
F11
F12
R6
C4
P3
Service
PL3
USB ASP
F2
F1
TP2
D12
HIGH VOLTAGE SIDE
PSU
C11
C14
R5
C8
R13
TP1
U2
R12
R2
C2
L1
C7
U3
R10
C3
C10
D2
C9
C15
TVS1
TP3
D1
IGAS.
www.igasdetection.com
MCTR.00010582.00.002
Serial: